Freestanding Fire Tables

Gin 90 Series

Gin 90 Bar shown paired with Sit B19 Bar Stools by Blinde Design

Gin 90 Low shown paired with Relax Modular Sofa & Sit A28 Armchair by Blinde Design

Freestanding Fire Tables

Gin 90 Series Design features

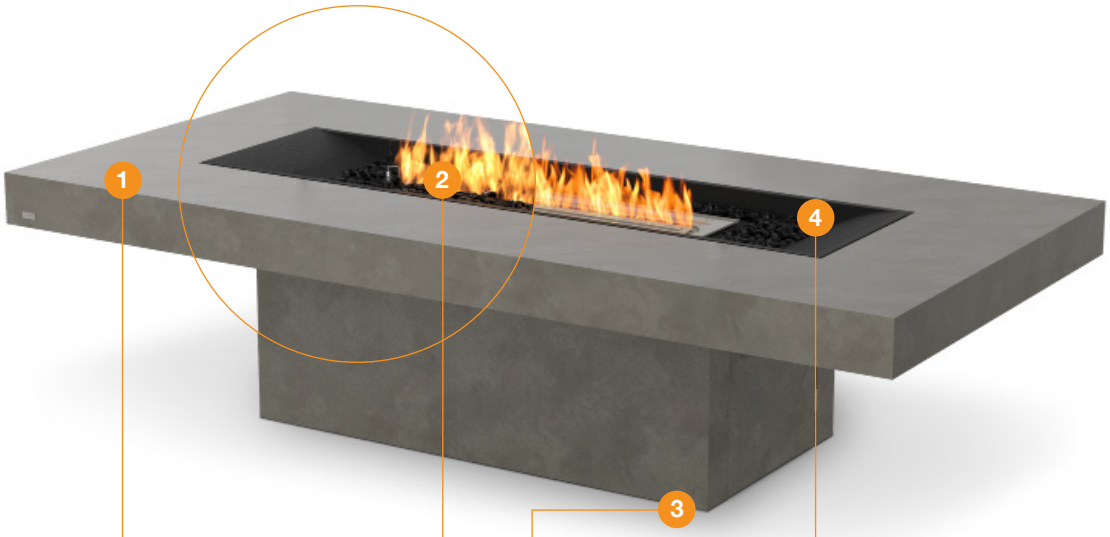

1. Fluid™ Concrete Finish
Incredibly strong yet relatively lightweight, EcoSmart's concrete products incorporate revolutionary Fluid Concrete Technology. Fluid features a stain and impact-resistant barrier that protects the concrete from environmental weathering – even under extreme conditions and long UV exposure.

Premium Teak Wood Finish
The most premium wood on the planet, teak is the strongest, most durable hardwood available. It contains a natural oil which repels water, keeping it from warping, cracking, or becoming brittle. Teak is the perfect material for outdoor furniture.

2. Triple Fuel Advantage
Choose between plumbed natural gas, readily available propane, or our eco-friendly bioethanol fuel system.

3. Articulating Feet
Our Fire Pits and Tables feature 360° height-adjustable articulating feet, so you can achieve a perfectly level and stable model before operating the fireplace.

Surround Colours/Finish
Available in three Fluid™ Concrete colours: Natural, Graphite and Bone. Or Natural Teak hardwood.

4. Decorative Media
Models come with black glass charcoal to add the finishing touch. They do not emit any toxic fumes, smoke, or ash.

Relocate with Ease
When you select Bioethanol or Liquid Propane as your fuel source you'll never be tied down! With zero hard utility connections, relocating your fire is a breeze. Entertain on your own terms with EcoSmart Fire.

Four Table Heights
Choose your preferred height from Low, Chat, Dining or Bar.

Ground Fixing Brackets
Models come with fixing brackets for permanently locating into a fixed position.

Global Compliance
This model complies with existing standards in the USA, Europe, UK and Australia. O-TL listed to UL 1370, EN 16647 BSI Certified and ACCC Safety Mandate compliant for bioethanol burners. LP/NG burners are UL/ULC listed to ANSI Z21.97-2017 and CSA 2.41-2017, and Gas Appliance Regulation 2016/426 as it applies to EU (CE) and UK (UKCA).

Gin 90 Low in Natural
(gas model shown)

Gin 90 Chat in Graphite
(ethanol model shown)

Gin 90 Dining in Bone
(gas model shown)

Gin 90 Bar in Teak
(gas model shown)

Disclaimer. All product specifications and data are subject to change without notice and believed to be correct at the time of publication. MAD Design Group (MDG), its affiliates, agents, and employees, and all persons acting on its or their behalf (collectively, "MAD Design Group"), disclaim any and all liability for any errors, inaccuracies or incompleteness contained herein or in any other disclosure relating to any product. MDG disclaims any and all liability arising out of the use or application of any product described herein or of any information provided herein to the maximum extent permitted by law. The product specifications do not expand or otherwise modify MDG's terms and conditions of purchase, including but not limited to the warranty expressed therein, which apply to these products. No license, express or implied, by estoppel or otherwise, to any intellectual property rights is granted by this document or by any conduct of MDG. Customers using or selling MDG products not expressly indicated for use in such applications do so entirely at their own risk and agree to fully indemnify MDG for any damages arising or resulting from such use or sale. Please contact authorised personnel from MDG to obtain written terms and conditions regarding products designed for such applications. Images are indicative only.

© Copyright 2004 - 2023 MAD Design Group. All rights reserved. V0923

ecosmart Fire

Gin 90 Series Accessories

Included accessories

Decorative Glass Charcoal

Our Glass Charcoal is made from high-quality tempered glass.

Glass Fire Screen

Paired with a glass fire screen, to stabilises the flame in windy conditions.

Jerry Can with Safety Spout and e-NRG bottle adaptor

Jerry Can allows safe storing/ decanting of e-NRG ethanol. e-NRG adaptor connects the Safety Spout to an e-NRG bottle.

e-NRG not available in all countries.

Lighting Rod & Lighter

The Lighting Rod is designed to safely adjust the slider position on the burner. It is also used for the ignition procedure.

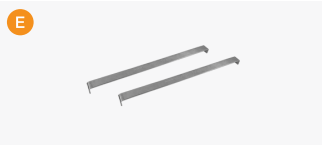

XL Baffles

Placed over the internal burner vents, they serve to increase the efficiency of the burner as well as further stabilise the flame.

T Teak models only E Ethanol models only

Optional accessories

Glass Fire Screen

Pair with a glass fire screen, to stabilises the flame in windy conditions.

All Seasons Cover

Take care and protect your investment with our stain and water resistant custom outdoor cover.

Silicone Burner Cover

Black silicone burner covers protect burners from the elements when not in use.

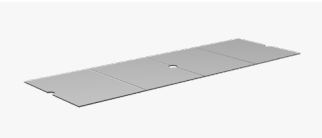

Glass Cover Plate

Enables fire pit tables to easily be transformed into a usable coffee table surface.

Disclaimer. All product specifications and data are subject to change without notice and believed to be correct at the time of publication. MAD Design Group (MDG), its affiliates, agents, and employees, and all persons acting on its or their behalf (collectively, "MAD Design Group"), disclaim any and all liability for any errors, inaccuracies or incompleteness contained herein or in any other disclosure relating to any product. MDG disclaims any and all liability arising out of the use or application of any product described herein or of any information provided herein to the maximum extent permitted by law. The product specifications do not expand or otherwise modify MDG's terms and conditions of purchase, including but not limited to the warranty expressed therein, which apply to these products. No license, express or implied, by estoppel or otherwise, to any intellectual property rights is granted by this document or by any conduct of MDG. Customers using or selling MDG products not expressly indicated for use in such applications do so entirely at their own risk and agree to fully indemnify MDG for any damages arising or resulting from such use or sale. Please contact authorised personnel from MDG to obtain written terms and conditions regarding products designed for such applications. Images are indicative only.

© Copyright 2004 - 2023 MAD Design Group. All rights reserved. V0923

Freestanding Fire Tables

Gin 90 Bar Specifications

Combining the functionality of a bar-height table with an integrated, elongated flame, Gin 90 Bar fire table is ideal for encouraging casual conversation.

Ventilation and Efficiency*

Model Dimensions L x W x H mm/in	Compatible Burner	Fuel Capacity	Heats on Average (Indoors)	Thermal Output Net (MAX per burner)	Approx. Burn Time	Minimum Room Size
2270 x 1100 x 1045 89.4 x 43.2 x 41.1	XL900 (Ethanol)	9 L [2.4 Gals]	Over 60 m^2 [645 ft^2]	16 MJ/h 15,000 BTU/h, 4.4 kW	8 - 13 hours	110 m^3 [3,884 ft^3]
	Liquid Propane	NA	Outdoor Use Only	65,000 BTU/h, 19 kW	8 - 20 hours	Outdoor Use Only
	Natural Gas				Unlimited	

Application[1]	Indoor & Outdoor
Surround Colours	Natural ESF.O.GIN.90.B.NA | ESF.O.GIN.90.B.NA.G Graphite ESF.O.GIN.90.B.GH | ESF.O.GIN.90.B.GH.G Bone ESF.O.GIN.90.B.BO | ESF.O.GIN.90.B.BO.G Teak ESF.O.GIN.90.B.NF | ESF.O.GIN.90.B.NF.G
Burner Colours	Stainless Steel Black
Materials	Fluid Concrete or Teak Wood Surround, Grade 304 Stainless Steel Burner, with optional Black Ceramic Coating
Approx. Weight	Concr. 221kg [486.7lbs] | Teak 125kg [274.4lbs] Weight includes burner and black glass charcoal.
Fuel Type	e-NRG Bioethanol, Liquid Propane or Natural Gas

*These values are indicative only.
[1] LP/NG is suited for Outdoor use only. Bioethanol is suited for both Indoor/Outdoor use, however, additional parts are REQUIRED for indoor use. Please advise your Sales Representative at the time of purchase so that the product can be configured accordingly. This model complies with existing standards in the USA, Europe, UK and Australia. O-TL listed to UL 1370, EN 16647 BSI Certified and ACCC Safety Mandate compliant for bioethanol burners. **To comply with EN 16647 the Indoor Safety Tray must be installed before operating indoors. LP/NG burners are UL/ULC listed to ANSI Z21.97-2017 and CSA 2.41-2017, and Gas Appliance Regulation 2016/426 as it applies to EU (CE) and UK (UKCA).

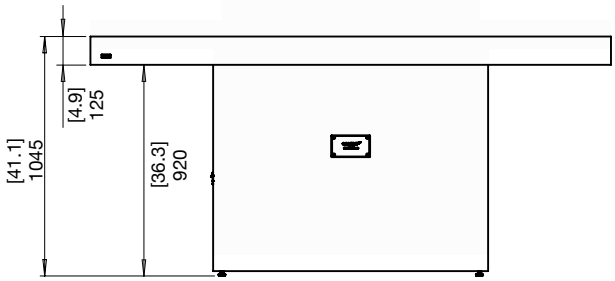

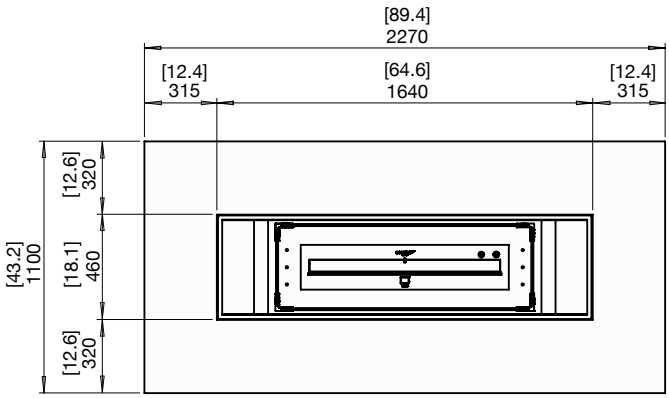

Line drawings show concrete models without a Fire Screen.
Refer to the Fire Screen model specifications for dimensions.

FOR MORE INFORMATION PLEASE REFERENCE THE CLEARANCE & INSTALLATION MANUAL

Disclaimer. All product specifications and data are subject to change without notice and believed to be correct at the time of publication. MAD Design Group (MDG), its affiliates, agents, and employees, and all persons acting on its or their behalf (collectively, "MAD Design Group"), disclaim any and all liability for any errors, inaccuracies or incompleteness contained herein or in any other disclosure relating to any product. MDG disclaims any and all liability arising out of the use or application of any product described herein or of any information provided herein to the maximum extent permitted by law. The product specifications do not expand or otherwise modify MDG's terms and conditions of purchase, including but not limited to the warranty expressed therein, which apply to these products. No license, express or implied, by estoppel or otherwise, to any intellectual property rights is granted by this document or by any conduct of MDG. Customers using or selling MDG products not expressly indicated for use in such applications do so entirely at their own risk and agree to fully indemnify MDG for any damages arising or resulting from such use or sale. Please contact authorised personnel from MDG to obtain written terms and conditions regarding products designed for such applications. Images are indicative only.

© Copyright 2004 - 2023 MAD Design Group. All rights reserved. V0923

Freestanding Fire Tables

Gin 90 Dining Specifications

A clever, dual-purpose fire dining table with room for dining chairs, the Gin 90 Dining features a linear flame as its centrepiece.

Ventilation and Efficiency*

Model Dimensions L x W x H mm/in	Compatible Burner	Fuel Capacity	Heats on Average (Indoors)	Thermal Output Net (MAX per burner)	Approx. Burn Time	Minimum Room Size
2270 x 1100 x 745 89.4 x 43.2 x 29.3	XL900 (Ethanol)	9 L [2.4 Gals]	Over 60 m^2 [645 ft^2]	16 MJ/h 15,000 BTU/h, 4.4 kW	8 - 13 hours	110 m^3 [3,884 ft^3]
	Liquid Propane	NA	Outdoor Use Only	65,000 BTU/h, 19 kW	8 - 20 hours	Outdoor Use Only
	Natural Gas				Unlimited	

Application[1]	Indoor & Outdoor
Surround Colours	Natural ESF.O.GIN.90.D.NA | ESF.O.GIN.90.D.NA.G Graphite ESF.O.GIN.90.D.GH | ESF.O.GIN.90.D.GH.G Bone ESF.O.GIN.90.D.BO | ESF.O.GIN.90.D.BO.G Teak ESF.O.GIN.90.D.NF | ESF.O.GIN.90.D.NF.G
Burner Colours	Stainless Steel Black
Materials	Fluid Concrete or Teak Wood Surround, Grade 304 Stainless Steel Burner, with optional Black Ceramic Coating
Approx. Weight	Concr. 203kg [447.1lbs] | Teak 119.7kg [263.4lbs] Weight includes burner and black glass charcoal.
Fuel Type	e-NRG Bioethanol, Liquid Propane or Natural Gas

*These values are indicative only.
[1] LP/NG is suited for Outdoor use only. Bioethanol is suited for both Indoor/Outdoor use, however, additional parts are REQUIRED for indoor use. Please advise your Sales Representative at the time of purchase so that the product can be configured accordingly. This model complies with existing standards in the USA, Europe, UK and Australia. O-TL listed to UL 1370, EN 16647 BSI Certified and ACCC Safety Mandate compliant for bioethanol burners. **To comply with EN 16647 the Indoor Safety Tray must be installed before operating indoors. LP/NG burners are UL/ULC listed to ANSI Z21.97-2017 and CSA 2.41-2017, and Gas Appliance Regulation 2016/426 as it applies to EU (CE) and UK (UKCA).

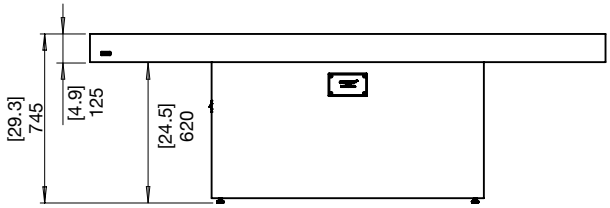

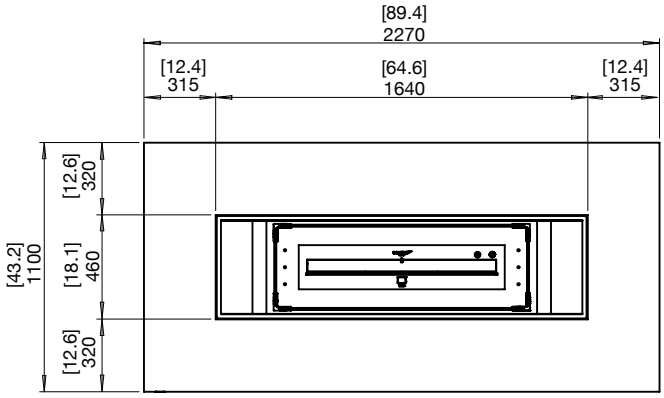

Line drawings show concrete models without a Fire Screen.
Refer to the Fire Screen model specifications for dimensions.

FOR MORE INFORMATION PLEASE REFERENCE THE CLEARANCE & INSTALLATION MANUAL

Disclaimer. All product specifications and data are subject to change without notice and believed to be correct at the time of publication. MAD Design Group (MDG), its affiliates, agents, and employees, and all persons acting on its or their behalf (collectively, "MAD Design Group"), disclaim any and all liability for any errors, inaccuracies or incompleteness contained herein or in any other disclosure relating to any product. MDG disclaims any and all liability arising out of the use or application of any product described herein or of any information provided herein to the maximum extent permitted by law. The product specifications do not expand or otherwise modify MDG's terms and conditions of purchase, including but not limited to the warranty expressed therein, which apply to these products. No license, express or implied, by estoppel or otherwise, to any intellectual property rights is granted by this document or by any conduct of MDG. Customers using or selling MDG products not expressly indicated for use in such applications do so entirely at their own risk and agree to fully indemnify MDG for any damages arising or resulting from such use or sale. Please contact authorised personnel from MDG to obtain written terms and conditions regarding products designed for such applications. Images are indicative only.

© Copyright 2004 - 2023 MAD Design Group. All rights reserved. V0923

Freestanding Fire Tables

ecosmart+ Fire

Gin 90 Chat Specifications

The warmth and aesthetic appeal of an open flame combined with a cleverly engineered piece of fire furniture are the hallmarks of the Gin 90 Chat fire pit table.

Ventilation and Efficiency*

Model Dimensions L x W x H mm/in	Compatible Burner	Fuel Capacity	Heats on Average (Indoors)	Thermal Output Net (MAX per burner)	Approx. Burn Time	Minimum Room Size
2270 x 1100 x 595 89.4 x 43.2 x 23.4	XL900 (Ethanol)	9 L [2.4 Gals]	Over 60 m^2 [645 ft^2]	16 MJ/h 15,000 BTU/h, 4.4 kW	8 - 13 hours	110 m^3 [3,884 ft^3]
	Liquid Propane	NA	Outdoor Use Only	65,000 BTU/h, 19 kW	8 - 20 hours	Outdoor Use Only
	Natural Gas				Unlimited	

Application[1]	Indoor & Outdoor
Surround Colours	Natural ESF.O.GIN.90.C.NA | ESF.O.GIN.90.C.NA.G Graphite ESF.O.GIN.90.C.GH | ESF.O.GIN.90.C.GH.G Bone ESF.O.GIN.90.C.BO | ESF.O.GIN.90.C.BO.G Teak ESF.O.GIN.90.C.NF | ESF.O.GIN.90.C.NF.G
Burner Colours	Stainless Steel Black
Materials	Fluid Concrete or Teak Wood Surround, Grade 304 Stainless Steel Burner, with optional Black Ceramic Coating
Approx. Weight	Concr. 188kg [415.4lbs] | Teak 110.7kg [243.6lbs] Weight includes burner and black glass charcoal.
Fuel Type	e-NRG Bioethanol, Liquid Propane or Natural Gas

*These values are indicative only.
[1] LP/NG is suited for Outdoor use only. Bioethanol is suited for both Indoor/Outdoor use, however, additional parts are REQUIRED for indoor use. Please advise your Sales Representative at the time of purchase so that the product can be configured accordingly. This model complies with existing standards in the USA, Europe, UK and Australia. O-TL listed to UL 1370, EN 16647 BSI Certified and ACCC Safety Mandate compliant for bioethanol burners. **To comply with EN 16647 the Indoor Safety Tray must be installed before operating indoors. LP/NG burners are UL/ULC listed to ANSI Z21.97-2017 and CSA 2.41-2017, and Gas Appliance Regulation 2016/426 as it applies to EU (CE) and UK (UKCA).

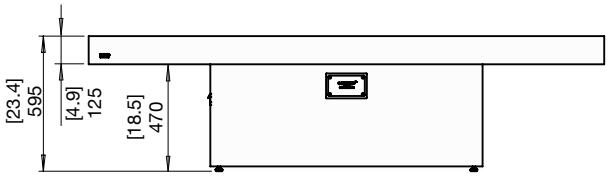

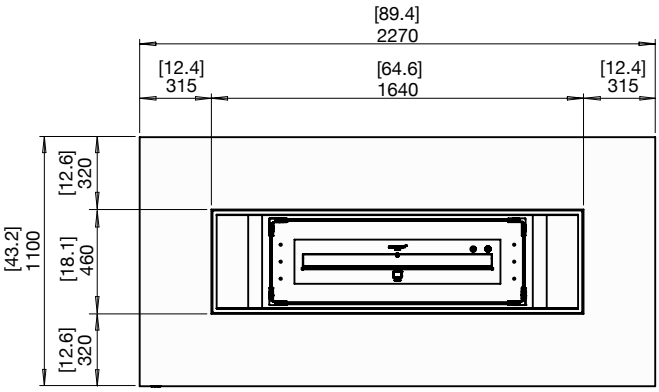

Line drawings show concrete models without a Fire Screen.
Refer to the Fire Screen model specifications for dimensions.

FOR MORE INFORMATION PLEASE REFERENCE THE CLEARANCE & INSTALLATION MANUAL

Disclaimer. All product specifications and data are subject to change without notice and believed to be correct at the time of publication. MAD Design Group (MDG), its affiliates, agents, and employees, and all persons acting on its or their behalf (collectively, "MAD Design Group"), disclaim any and all liability for any errors, inaccuracies or incompleteness contained herein or in any other disclosure relating to any product. MDG disclaims any and all liability arising out of the use or application of any product described herein or of any information provided herein to the maximum extent permitted by law. The product specifications do not expand or otherwise modify MDG's terms and conditions of purchase, including but not limited to the warranty expressed therein, which apply to these products. No license, express or implied, by estoppel or otherwise, to any intellectual property rights is granted by this document or by any conduct of MDG. Customers using or selling MDG products not expressly indicated for use in such applications do so entirely at their own risk and agree to fully indemnify MDG for any damages arising or resulting from such use or sale. Please contact authorised personnel from MDG to obtain written terms and conditions regarding products designed for such applications. Images are indicative only.

© Copyright 2004 - 2023 MAD Design Group. All rights reserved. V0923

Freestanding Fire Tables

Gin 90 Low Specifications

True to its name, the Gin 90 Low table is a low-set fire pit table that's been created to be a multi-functional piece of furniture for indoors or outside.

Ventilation and Efficiency*

Model Dimensions L x W x H mm/in	Compatible Burner	Fuel Capacity	Heats on Average (Indoors)	Thermal Output Net (MAX per burner)	Approx. Burn Time	Minimum Room Size
2270 x 1100 x 345 89.4 x 43.2 x 13.6	XL900 (Ethanol)	9 L [2.4 Gals]	Over 60 m^2 [645 ft^2]	16 MJ/h 15,000 BTU/h, 4.4 kW	8 - 13 hours	110 m^3 [3,884 ft^3]
	Liquid Propane	NA	Outdoor Use Only	65,000 BTU/h, 19 kW	8 - 20 hours	Outdoor Use Only
	Natural Gas				Unlimited	

Application[1]	Indoor & Outdoor
Surround Colours	Natural ESF.O.GIN.90.L.NA | ESF.O.GIN.90.L.NA.G Graphite ESF.O.GIN.90.L.GH | ESF.O.GIN.90.L.GH.G Bone ESF.O.GIN.90.L.BO | ESF.O.GIN.90.L.BO.G Teak ESF.O.GIN.90.L.NF | ESF.O.GIN.90.L.NF.G
Burner Colours	Stainless Steel Black
Materials	Fluid Concrete or Teak Wood Surround, Grade 304 Stainless Steel Burner, with optional Black Ceramic Coating
Approx. Weight	Concr. 171kg [376.5lbs] | Teak 91.7kg [201.8lbs] Weight includes burner and black glass charcoal.
Fuel Type	e-NRG Bioethanol, Liquid Propane or Natural Gas

*These values are indicative only.
[1] LP/NG is suited for Outdoor use only. Bioethanol is suited for both Indoor/Outdoor use, however, additional parts are REQUIRED for indoor use. Please advise your Sales Representative at the time of purchase so that the product can be configured accordingly. This model complies with existing standards in the USA, Europe, UK and Australia. O-TL listed to UL 1370, EN 16647 BSI Certified and ACCC Safety Mandate compliant for bioethanol burners. **To comply with EN 16647 the Indoor Safety Tray must be installed before operating indoors. LP/NG burners are UL/ULC listed to ANSI Z21.97-2017 and CSA 2.41-2017, and Gas Appliance Regulation 2016/426 as it applies to EU (CE) and UK (UKCA).

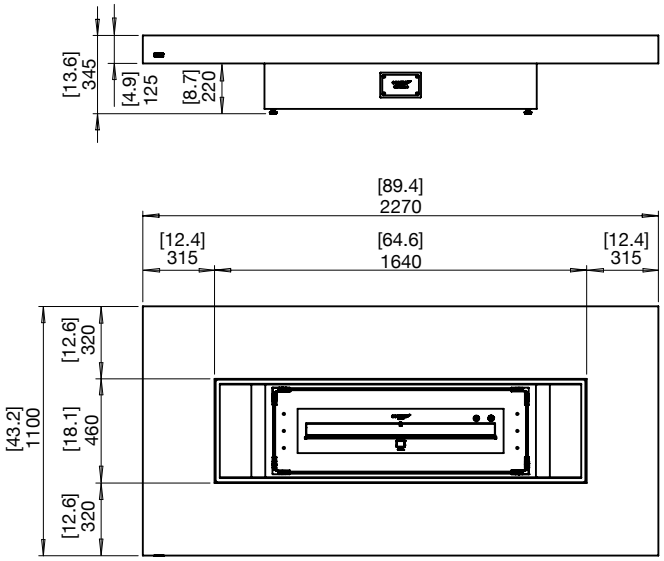

Line drawings show concrete models without a Fire Screen.
Refer to the Fire Screen model specifications for dimensions.

FOR MORE INFORMATION PLEASE REFERENCE THE CLEARANCE & INSTALLATION MANUAL

Disclaimer. All product specifications and data are subject to change without notice and believed to be correct at the time of publication. MAD Design Group (MDG), its affiliates, agents, and employees, and all persons acting on its or their behalf (collectively, "MAD Design Group"), disclaim any and all liability for any errors, inaccuracies or incompleteness contained herein or in any other disclosure relating to any product. MDG disclaims any and all liability arising out of the use or application of any product described herein or of any information provided herein to the maximum extent permitted by law. The product specifications do not expand or otherwise modify MDG's terms and conditions of purchase, including but not limited to the warranty expressed therein, which apply to these products. No license, express or implied, by estoppel or otherwise, to any intellectual property rights is granted by this document or by any conduct of MDG. Customers using or selling MDG products not expressly indicated for use in such applications do so entirely at their own risk and agree to fully indemnify MDG for any damages arising or resulting from such use or sale. Please contact authorised personnel from MDG to obtain written terms and conditions regarding products designed for such applications. Images are indicative only.

© Copyright 2004 - 2023 MAD Design Group. All rights reserved. V0923